VHF RADIO (DSC Class D)

NVR-2000

- Meet the latest ITU standards
- 4-digit channels available
- Dual watch function
- Built-in GNSS receiver
- Type approval with CCS

- NVR-2000 VHF RADIO is a high-performance VHF device, capable of voice communication and DSC (digital selective calling) facilities as well.
- Conforming to the Class D standard set for VHF DSC by ITU and IMO regulations, NVR-2000 conforms to the regulations of ITU Regulation Appendix 18, ITU-R M.493-16, ITU-R M.541-11, IMO MSC.1/Circ.1460/Rev.5, IEC 61097-7, etc.

CCS GMDSS VHF DSC

SPECIFICATIONS

● TX Frequency:	156.025 ~ 157.425 MHz
● RX Frequency:	156.050 ~ 163.275 MHz
● Working Channel:	Full ITU channels
● DSC Watch CH:	CH70
● TX Power:	25 W (high) / 1 W (low)
● RX Sensitivity:	≤2 μ V (SINAD=20 dB)
● Interface:	
- GNSS Input:	RS422，4800bps
- Print I/O:	RS232，4800bps
● Power Supply:	DC 13.8 V (range 12V~15V), max 5.5 A
● Size:	137 (H)×233 (W)×91 (D) mm
● Weight:	1.3 kg
● Operating Temperature:	-15° ~ 55°C (Transceiver, Microphone)
	-40° ~ 55°C (Antenna)
● IP Grade:	IP22: Transceiver, Microphone
	IP66: Antenna

SIZE DIMENSION

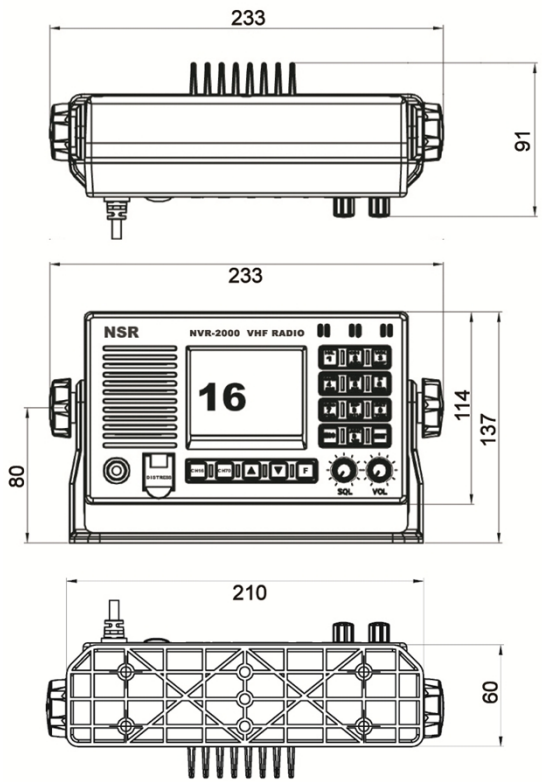

EQUIPMENT LIST

● **STANDARD**		
- Transceiver	NVR-2000	1 pc
- Microphone	NHS-102	1 pc
- Accessories		1 set
● **OPTIONS**		
- AC/DC PSU	PS-10B	1 pc
- GNSS Antenna（with 10m cable）	NGA100	1 pc
- VHF Antenna	NVA100	1 pc
- External Speaker	NSK-100	1 pc

SYSTEM DIAGRAM

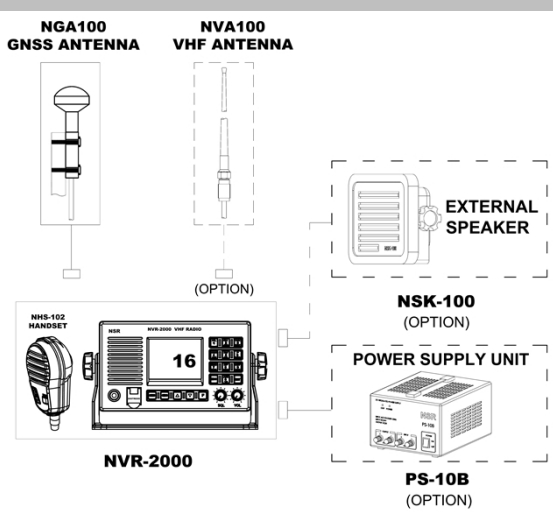

※ *Specifications subject to change without notice*