AIS AtoN SERIES (Type I)

NAN-1000/2000/4000/5000

- Dual functions: Real and Virtual AtoN
- Each transmits for up to 50 virtual AtoN
- TX power up to 12.5W, wide coverage
- Very low power consumption
- Compact design, maintenance-free

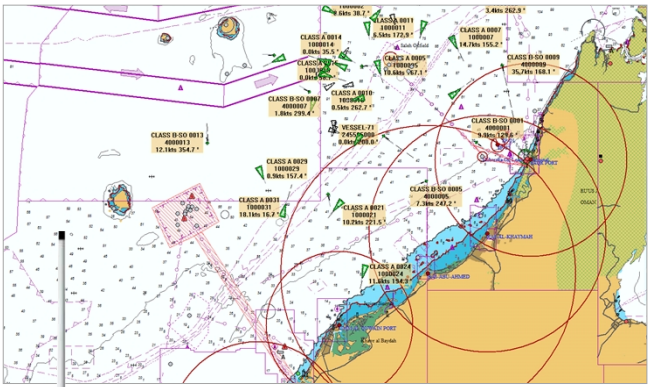

NAN-1000

NAN-2000

NAN-4000

NAN-5000

Model No.	Shape	Output Power	GPS Antenna	VHF Antenna	Power Supply
NAN-1000	Radome Type	12.5 W	Inside	Inside	12~18 V
NAN-2000	UFO Type	12.5 W	Inside	Separate	12~18 V
NAN-4000	Pole Type	2.0 W	Inside	Outside	12~18 V
NAN-5000	Box Type	12.5 W	Separate	Separate	12~18 V

FEATURES

- AIS AtoN station is used for light monitoring from AtoN administration. AIS AtoN station's transmission can be received by shipborne AIS to learn the position & status of the AtoN.
- As Type I defined by IALA, NAN-X000 is specially designed to be used for buoys, which carry limited batteries to supply any additional electronic equipment.
- NAN-X000 can be used for below applications:

- AtoN in River or at Sea
- Offshore and oil platform
- Oceanic buoys
- Electronic fence in water
- Offshore wind farm
- Electronic passage by bridge

- NAN-X000 is designed to transmit messages both for real and virtual AIS AtoN. For example, NAN-X000 can be used by the harbor authority to establish a virtual AIS AtoN channel. When shipborne AIS receives those transmissions, a series of AtoN symbols will be displayed on the electronic chart.
- NAN-X000 conforms to the international standards such as IALA A-126, IEC 62320-2, ITU-R M.1371-5 and IEC 60945.

SPECIFICATIONS

TX Frequencies:	AIS 1, AIS 2
Communication Mode:	FATDMA, RATDMA
Message Type:	MSG 6, MSG 21 (default)
TX Interval:	3～60 minutes (to be configured)
TX Power:	12.5 W (NAN-1000/2000/5000) 2 W (NAN-4000)
Power Consumption:	≤40 mA (12V)
Interface:	RS232, NMEA 0183
Operating Temperature:	-15℃～+55℃
Power Supply:	Nominal DC 12 V (range 12～18 V)
IP grade:	IP 66

SIZE DIMENSION

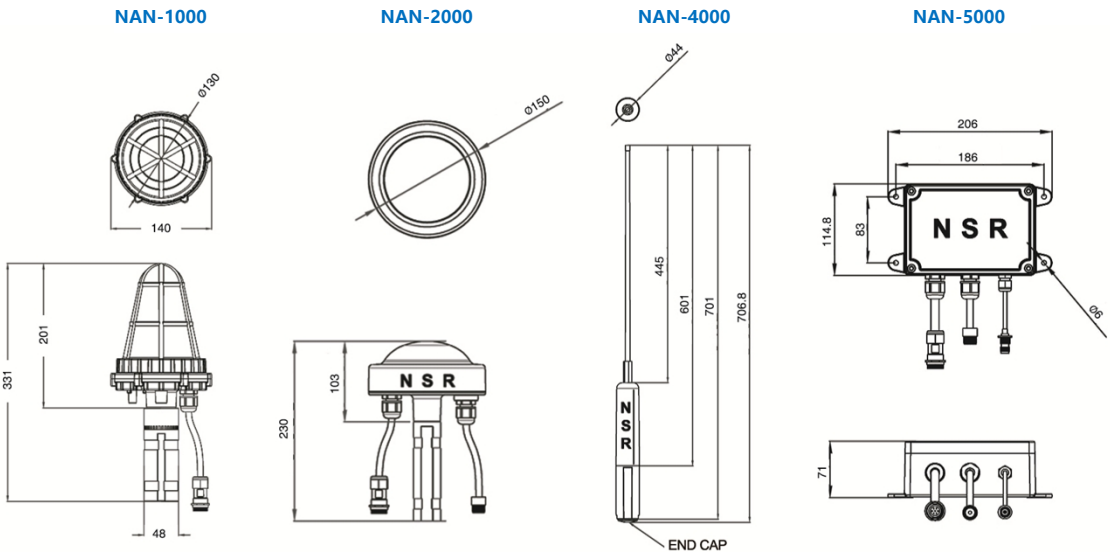

※ *Specifications subject to change without notice*