ANEMOMETER

AM-100

- Strong nylon material used for transmitter case
- True wind speed/direction available
- Up to 4 display units and 6 data output
- Type approval with CCS

AM-100R
REMOTE BUTTON

AM-100T ANEMOMETER TRANSMITTER

AM-100D DISPLAY UNIT

- AM-100 Digital Anemometer is designed for marine use. With case made of nylon and PC material, AM-100 can stand strong wind of 60+m/s and can be installed outdoor without corrosion.
- AM-100 can support up to 4 display units to indicate wind speed and direction at four locations onboard. Maximum 6 ports of RS422 output are available, to provide wind data to other navigation devices.
- Real wind direction and speed can be indicated when AM-100 is connected with speed log and compass. The heading and speed data can also be provided with COG & SOG from GPS receiver, if the connection with speed log and compass is not possible in some cases.

CCS

NYLON
NYLON with 30% glass

SPECIFICATIONS

- Wind Range: Wind direction 0～360°
  Wind velocity 0～60 m/s
- Accuracy: Wind direction ±5°
  Wind velocity ±(0.5+ V×5%) m/s
- Power Supply: AC 100 V ~ 240 V
- Output Data: NMEA 0183 (6 ports, RS422), 4800 bps
- Input Signal: Gyro Compass, NMEA 0183, RS422
  Speed Log, NEMA 0183, RS422
- Display Capacity: Max 4 Display Units to be connected
- Size: 627 (H)×605 (L)×243 (propeller diameter) mm (Transmitter)
- Weight: 4.3 kg (Transmitter)
- Operation Temperature: Outdoor -30℃～+70℃, Indoor -15℃～+55℃
- IP Grade: IP22 (Display Unit, Junction Box, Remote Button)
  IP66 (Transmitter, Watertight Box)

EQUIPMENT LIST

● STANDARD

- Anemometer Transmitter	AM-100T	1 pc
- Display Unit	AM-100D	1 pc
- Junction Box	AM-100J	1 pc
- Watertight Box	AM-100TJ	1 pc
- Accessories		1 set

● OPTIONS

- Remote Button	AM-100R
- Additional Display Unit	AM-100D
- Additional Cables	

SYSTEM DIAGRAM

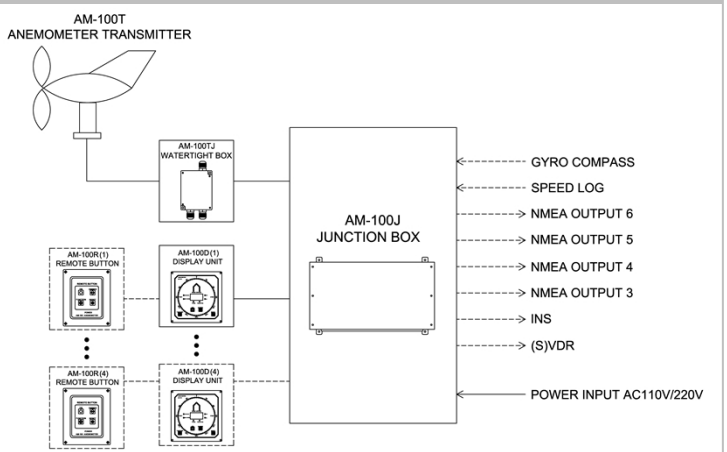

SIZE DIMENSION

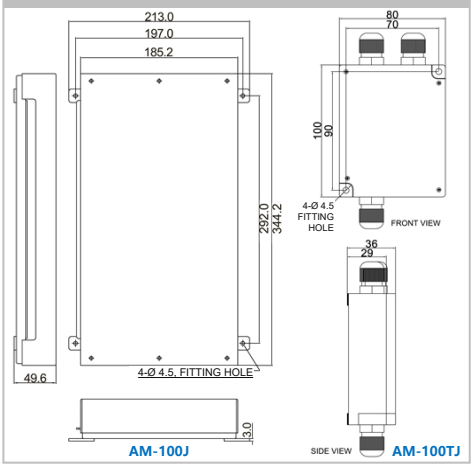

SIZE DIMENSION

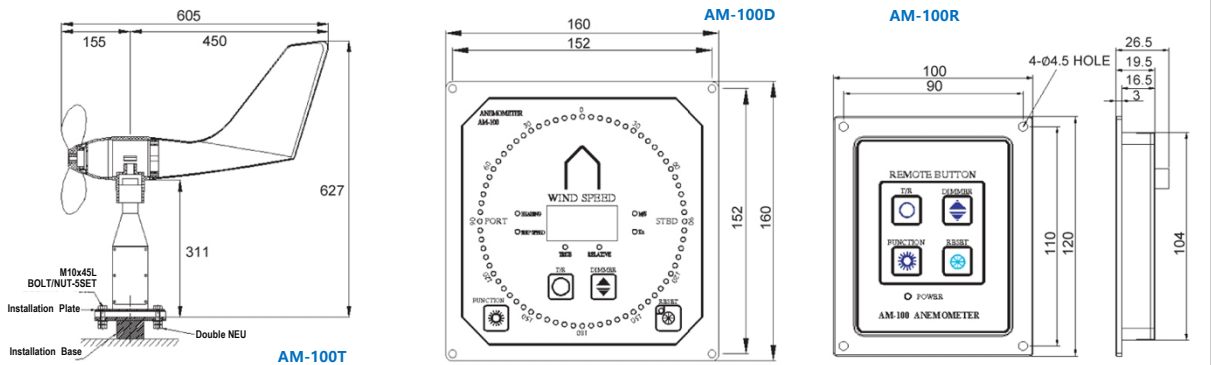

※ *Specifications subject to change without notice*